US006881506B2

(12) **United States Patent**
Anderson et al.

(10) **Patent No.: US 6,881,506 B2**
(45) **Date of Patent: Apr. 19, 2005**

(54) **RADIANT AND CONVECTIVE HEAT RESISTANT MATERIALS AND EMERGENCY FIRE SHELTER MADE THEREFROM**

(75) Inventors: **Leslie Leah Anderson**, Missoula, MT (US); **Mary Ann Davies**, Missoula, MT (US); **Anthony Clement Petrilli**, Florence, MT (US); **Mark Y. Ackerman**, Sherwood Park (CA)

(73) Assignees: **The United States of America as represented by the Secretary of Agriculture**, Washington, DC (US); **The Governors of the University of Alberta**, Edmonton (CA)

(*) Notice: Subject to any disclaimer, the term of this patent is extended or adjusted under 35 U.S.C. 154(b) by 10 days.

(21) Appl. No.: **10/286,176**

(22) Filed: **Nov. 1, 2002**

(65) **Prior Publication Data**

US 2004/0087232 A1 May 6, 2004

(51) **Int. Cl.**[7] **B27N 9/00**; E04H 15/56; E04H 15/36; D03D 15/00; B32B 15/14

(52) **U.S. Cl.** **428/920**; 135/116; 135/124; 135/137; 442/228; 442/233; 442/235

(58) **Field of Search** 135/116, 124, 135/137; 442/228, 232, 233, 234, 235; 428/920

(56) **References Cited**

U.S. PATENT DOCUMENTS

659,981 A * 10/1900 McCall 135/116
2,266,853 A * 12/1941 Dabney 135/126

(Continued)

OTHER PUBLICATIONS

Davis, R. et al.; *Wildland Firefighting Agencies' Leadership Approves Redesigning Fire Shelter*; Jun. 10, 2002; NIFC News.

Gadbow, D.; *Fire Council Select Shelter made in Missoula*; Jun. 13, 2002; The Missoulian.

Putnam. T.; *Your Fire Shelter*; 1995 edition; Tech. Rep. 9551–2819–MTDC; U.S.D.A. Forest Service.

Gadbow, D.; *Your Fire Shelter, Beyond the Basics*; 1996 edition; Tech. Rep. 9651–2829–MTDC; U.S.D.A. Forest Service.

Primary Examiner—Elizabeth M. Cole
Assistant Examiner—Jeremy R. Pierce
(74) *Attorney, Agent, or Firm*—Jolin D. Fado; Lesley E. Shaw; Janet I. Stockhausen

(57) **ABSTRACT**

The invention is a new heat and fire resistant material and an improved wildland fire shelter and kit. The material is made of a woven silica-based cloth layered in several possible combinations with foil and fiberglass cloth layers. The layers can be arranged in a variety of sequences to minimize the thermal radiation to the inside of the material or shelter. However, a foil layer must always be the outermost layer to provide protection from radiant heat and a layer of foil must be present between the interior of the shelter or material and any layer of adhesive to limit accumulation of gases inside the shelter if the adhesive or other substance should break down when exposed to heat. The silica cloth, aluminum foil, and fiberglass cloth may be laminated or sewn together. The shape of the fire shelter is a half cylinder with ¼ sphere at each end. The shelter is contained in an easy-open polyvinyl bag which provides for quick removal and deployment of the fire shelter.

16 Claims, 4 Drawing Sheets

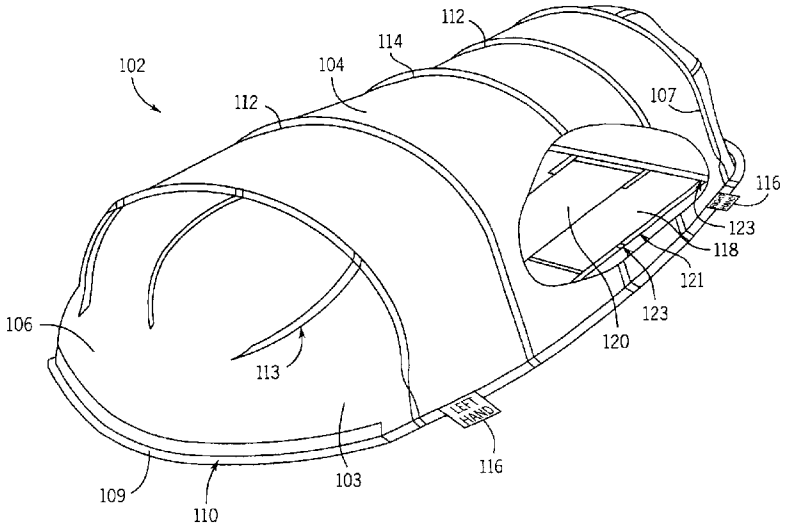

U.S. PATENT DOCUMENTS

3,471,007 A 10/1969 Sherman
3,769,146 A * 10/1973 Ravel 428/219
3,837,405 A * 9/1974 Huddle 135/124
3,970,096 A 7/1976 Nicolai
D251,215 S 2/1979 Marks
4,165,757 A 8/1979 Marks
4,395,453 A * 7/1983 Lines et al. 428/920
4,401,707 A * 8/1983 Bailey et al. 428/921
4,500,593 A * 2/1985 Weber 428/920
4,808,465 A * 2/1989 Vane 428/921
4,858,797 A 8/1989 Rabska
4,943,252 A 7/1990 Manix
5,033,497 A 7/1991 Hernandez
5,197,504 A 3/1993 Howe
5,197,505 A 3/1993 Tate
5,341,973 A 8/1994 Dawes et al.
5,402,615 A * 4/1995 Knott et al. 428/920
5,436,075 A * 7/1995 Sawko 428/377
5,619,955 A 4/1997 Nelson
5,645,926 A 7/1997 Horrocks et al.
5,681,640 A * 10/1997 Kiser 428/920
5,830,319 A 11/1998 Landin
5,921,388 A 7/1999 Petrilli et al.
6,048,805 A 4/2000 Gottfried
6,672,323 B1 * 1/2004 Gupta et al. 135/126

* cited by examiner

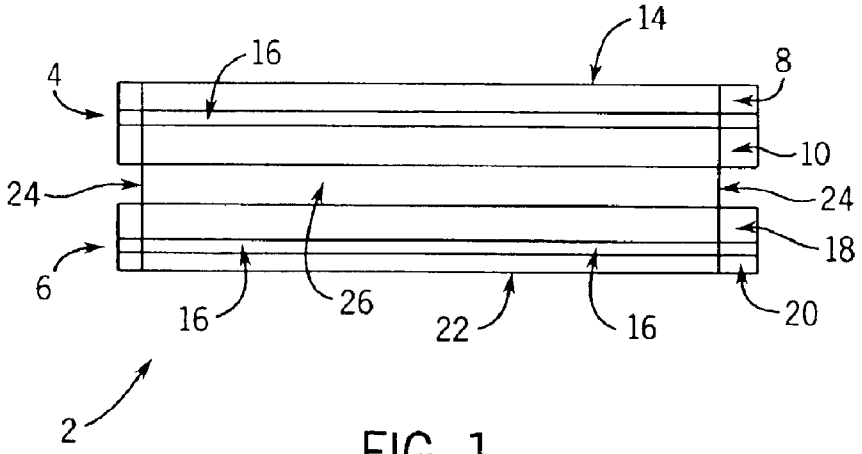
14
16
8
4
10
24
24
18
6
16
26
22
16
20
2

FIG. 1

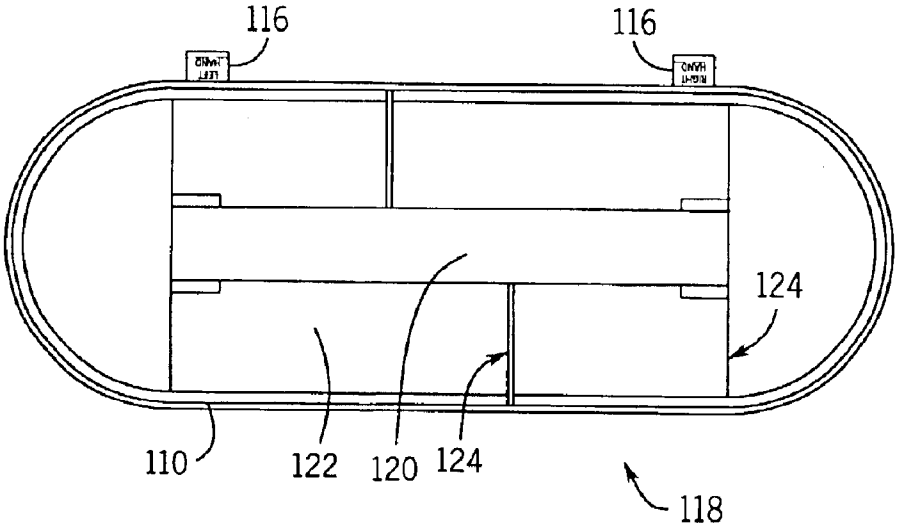
116
116
124
110
122
120
124
118

FIG. 3

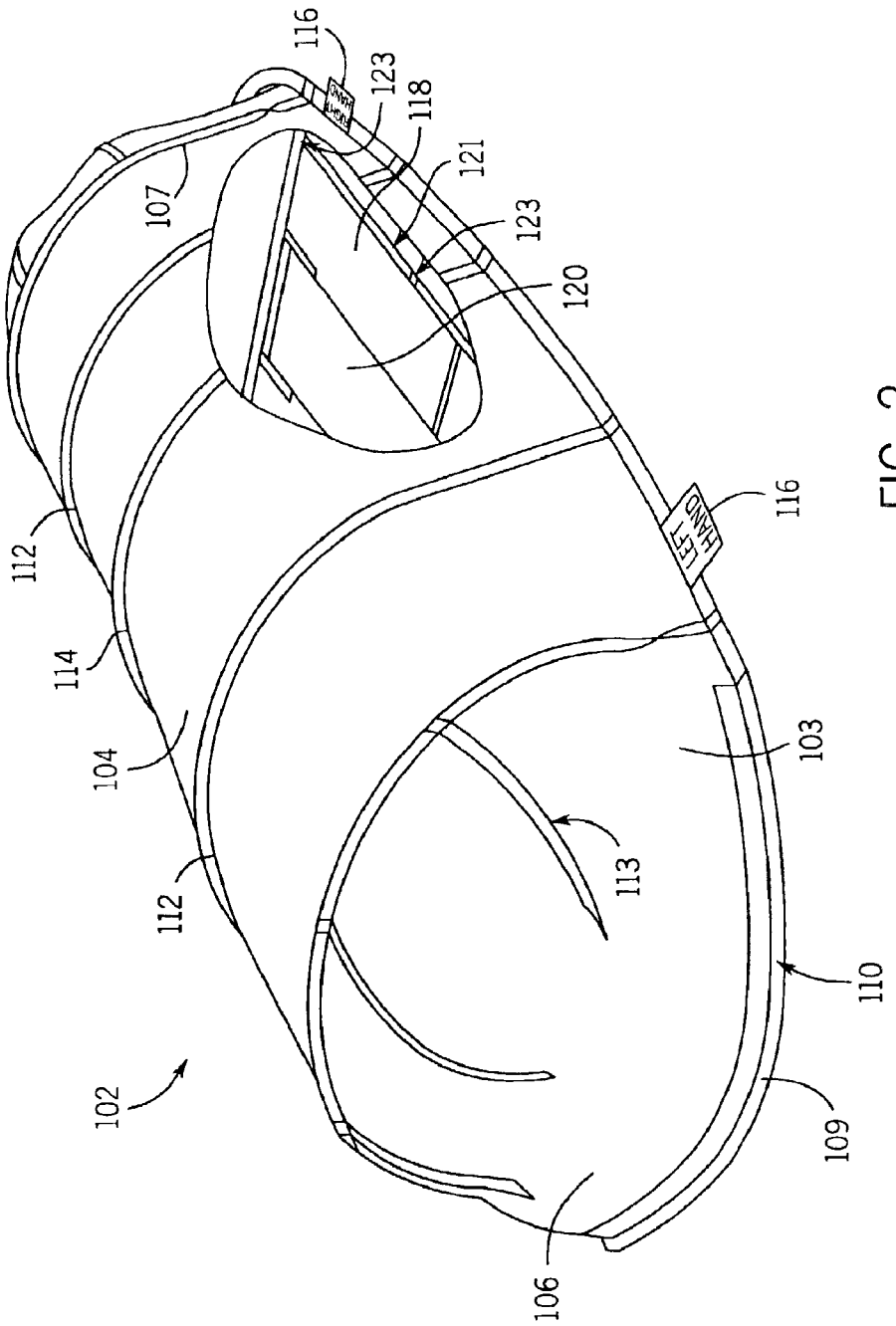
116
123
118
121
123
120
107
112
114
104
112
102
116
LEFT HAND
103
113
110
109
106

FIG. 2

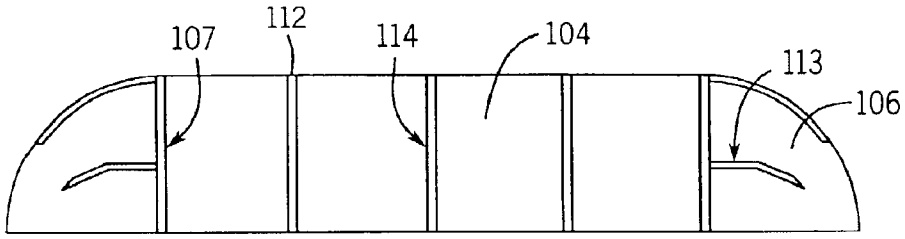
107
112
114
104
113
106

FIG. 4

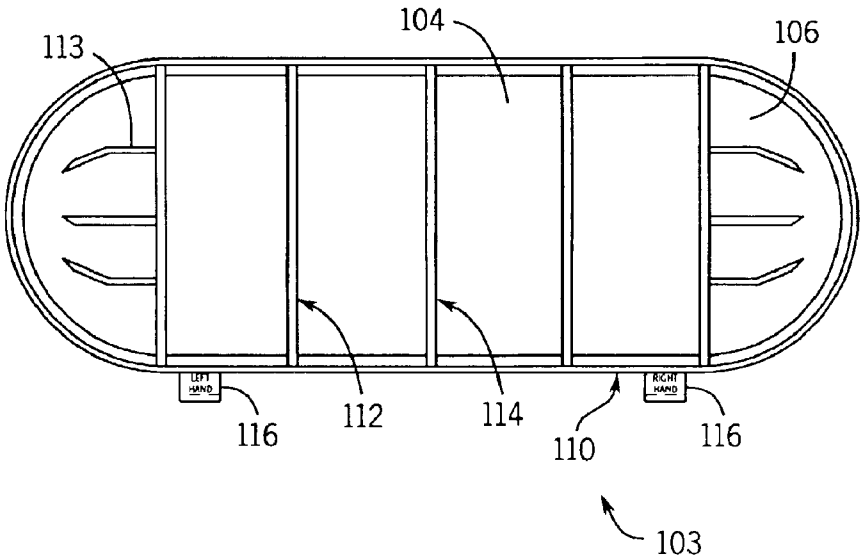
113
104
106
LEFT HAND
RIGHT HAND
116
112
114
110
116
103

FIG. 5

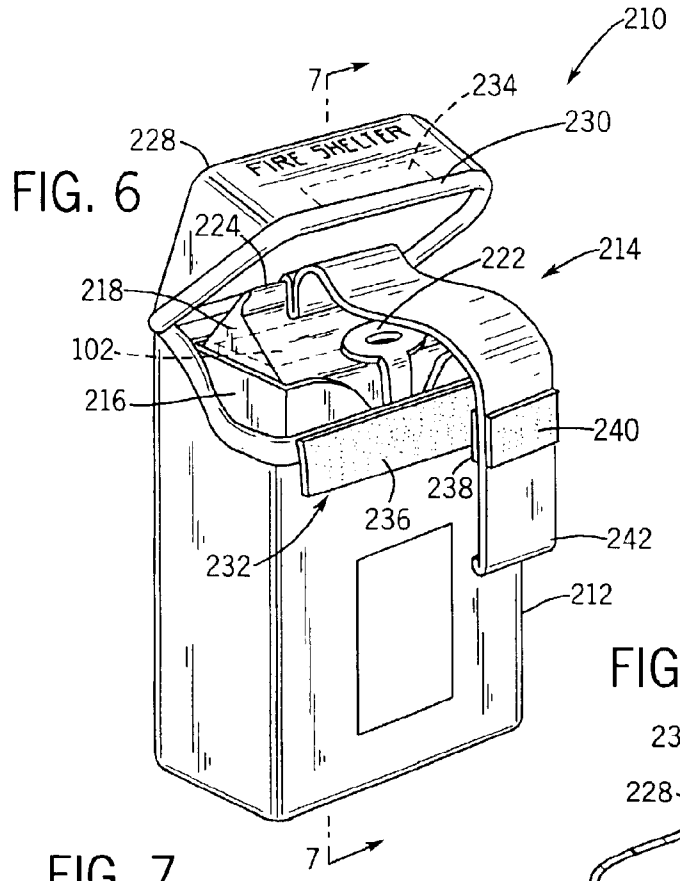

FIG. 6

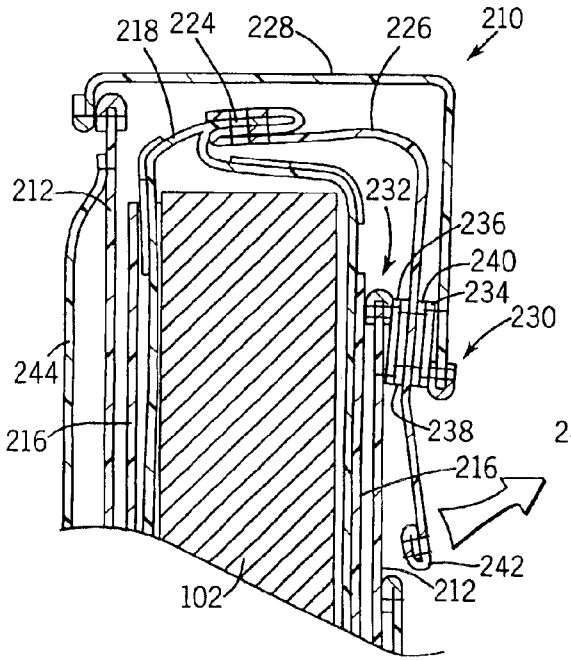

FIG. 7

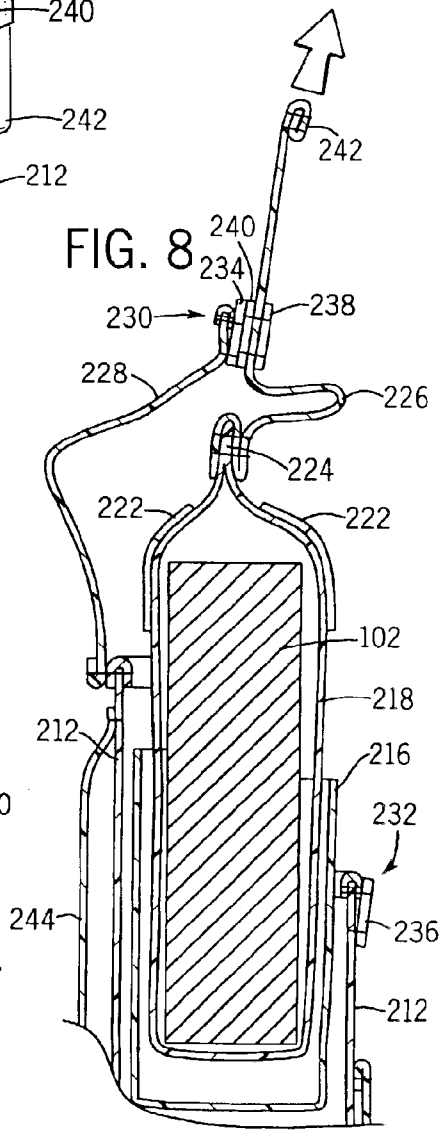

FIG. 8

RADIANT AND CONVECTIVE HEAT RESISTANT MATERIALS AND EMERGENCY FIRE SHELTER MADE THEREFROM

STATEMENT OF FEDERAL SPONSORSHIP

The Government of the United States of America has rights in this invention.

FIELD OF THE INVENTION

The present inventive subject matter relates to materials that are resistant to radiant and convective heat. More particularly, the present invention relates to a novel emergency fire shelter constructed of the heat and fire resistant materials. The present invention also relates to a kit containing an emergency fire shelter that can be quicky deployed in the event of danger from a wildland fire.

BACKGROUND OF THE INVENTION

An emergency fire shelter is a compact, tent-like structure providing emergency protection to a firefighter trapped by a rapidly advancing forest fire. The fire shelter is constructed of materials that are resistant to radiant and convective heat. An example of such a material is a heat-reflecting foil bonded to the outside of a fiberglass cloth. A combination of flexible materials allows the fire shelter to be accordion folded into a compact brick that can be carried with the firefighter at all times. Thus, the selection of materials for use in the construction of an emergency fire shelter is critical to its effectiveness.

Several layered materials are designed to provide a shield from a variety of environmental hazards including heat and fire. However, there is a need for an improved light, flexible, and strong material which provides protection from radiant and convective heat. Such a material would not only be used in construction of emergency fire shelters, but could also be used as a shield against fire and heat in other settings including, for instance, fire barriers, heat shields, fire proof curtains and the like.

Emergency fire shelters in use today share the same form as a pup tent, triangular in shape. Such a design is illustrated by U.S. Pat. No. 5,921,388 to Petrilli et. al. A problem with emergency fire shelters currently used is that they have flat, triangular ends that are perpendicular to the ground and reflect radiant energy. Reflection of this energy to the ground immediately adjacent to the fire shelter increases the likelihood that fire will start adjacent to the shelter, thus allowing damage to the fire shelter prior to the arrival of the flame front. Accordingly, there is a need for an emergency fire shelter design that minimizes such heat transfer. More information on prior art fire shelters and their use is contained in "Your Fire Shelter" and "Your Fire Shelter, Beyond the Basics" published by the United States Department of Agriculture, Forest Service, Technology and Development Program, under Codes NFES 1750 and 2179, hereby incorporated by reference.

An emergency fire shelter is inevitably deployed under emergency situations and time is frequently of the essence. Ideal deployment is in an area removed from large amounts of combustible material. For this reason, the initial stages of deployment may occur while the firefighter is running to a safe deployment area. When using many of the prior art fire shelters, the removal of the fire shelter from its carrying case may be hampered by the firefighter's dropping of his or her backpack to obtain greater mobility and to jettison dangerous combustible materials such as fusees.

Accordingly, it is desirable to provide an emergency fire shelter that is easier and faster to deploy. Such a shelter would require ease of transport by fire fighters and protection during prolonged periods of storage.

DESCRIPTION OF THE RELATED ART

Various layered materials are designed to provide a shield from a variety of environmental hazards such as heat and fire. The designs vary depending on the application for which the material is to be used. These designs include fabrics as well as composite designs.

U.S. Pat. No. 6,048,805 discloses a fire, heat and backdraft protection system for protecting firefighters in all types of fires. The protection system includes a composite laminate structure having a plurality of layers for the protection of firefighters who are exposed to high temperatures of 2200 degrees Farenheight for 30 minutes in duration. The plurality of layers includes an outer first layer, an inner second layer and an inner third layer. The outer first layer is a fiberglass textile having an intumescent coating resistant to heat, water and impact. The inner second layer is a metal foil layer for reflecting heat and eliminates the convection transfer of heat. The inner third layer is a low conductivity refractory blanket for reducing the transmission of heat. The inner fourth layer is a metal foil layer for reflecting heat and eliminates the convection transfer of heat.

U.S. Pat. No. 5,830,319 discloses a flexible fire barrier felt that includes an organic polymeric binder; a phosphorus-containing compound; organic fibers with pendant hydroxyl groups; and a heat absorbing compound. The flexible fire barrier felt is comprised of at least 10 wt-% of an organic polymeric binder; at least about 5 wt-% of organic fibers having pendant hydroxyl groups; and at least about 10 wt-% of a heat absorbing compound; wherein the felt contains at least about 0.3 wt-% phosphorus, as provided by a phosphorus-containing compound; and wherein all weight percentages are based on the total dry weight of the felt.

U.S. Pat. No. 5,645,926 discloses a flexible fire and heat resistant material comprising an intimate mixture of organic intumescent filler and organic fibers adapted to char intensely within the temperature range of 200° C. to 500° C. The added presence of inorganic fiber components enhances the structural integrity of this structure both during char formation up to 500° C. and at higher temperatures up to 1200° C. once char oxidation takes place.

Some fire shelters and tents presently being used have generally rounded features. Examples of tents found in the prior art as listed below.

U.S. Pat. No. 5,645,926 discloses a tent with a fabric layer over one or more arch poles, wherein said pole or poles is tensionable by means of tensioning members connected between upper and lower points of each said pole. More particularly, the tent is comprised of a fabric layer over one or more flexible resilient poles having opposed pole ends, each pole being arched and defined within a respective generally vertical plane. The tent has a longitudinal axis generally perpendicular to the plane of the poles, each pole being oriented such that the pole ends define lower points and a region of the pole intermediate the pole ends defines an upper point. A pair of tensioning members connected to the poles, each tensioning member having opposed ends connected at one end to the upper point of the pole and at the other tensioning member end to one or the other of the lower points of the pole to be in the same plane as the pole. The tensioning member is positioned within the tent and distortion of pole shape laterally to the longitudinal axis of the tent is resisted.

U.S. Pat. No. 4,465,757 discloses a double walled tent supported by outwardly leaning pairs of arches and an interconnecting flexible ridge member. The ridge member is associated with the outer wall or cover, so that the outer wall may be tensioned to form the shelter. An inner wall or cover is suspended from the outer wall by netted webbing which allows circulation between the walls.

U.S. Pat. No. 3,970,096 discloses a tent comprised of outer nonporous and inner porous layers disposed in spaced relation to each other, with a continuous air passageway there between. Compression tent supporting means comprises a plurality of demountable, substantially, semicircular rods, preferably formed of fiber glass, forming arched rafters, and of a plurality of relatively short pieces slidably interconnected to form two rod units. These two rod units are interconnected by a sleeve, slidably mounted on one unit, to slidably receive the end portion of the other. The arched rafters are spaced apart and aligned substantially parallel to each other and progressively decrease in diameter in a tent longitudinal direction. An inner tent layer is suspendedly supported by an outer layer by porous netting strips. At the end portions, nonporous, substantially semiannular shaped end members are provided which extend radially inwardly and angularly between the inner and outer tent layers. At the end portions, the outer tent layer is under tension by opposite, outwardly directed forces. All of the forces holding the tent in place are tension forces except forces acting through the tent rod units which are compression forces. All heat generated within the tent, such as that formed by human breathing or by the burning of a candle, rises upwardly in the tent and passes through the inner tent layer, thence longitudinally through the passageway between the inner and outer tent layers and thereafter out through the tent end portions by way of breather passageways disposed in end portions of the tent.

As discussed previously, it is important that an emergency fire shelter have ease of transport by fire fighters and be protected during prolonged periods of storage. Further, it is desirable that the shelter is fast and easy to deploy. Numerous patents disclose rapidly deployable devices such as belt packs and the like.

U.S. Pat. No. 5,921,388 discloses a rapidly deployable fire shelter that employs a flexible web handle attached directly to a protective pouch holding the folded fire shelter. The handle includes opposed fastener surfaces that may be interposed between the closure normally holding the cover to the protective pouch. The handle extends outside the pouch to be grasped by the firefighter and pulled so as in a single motion to release the cover from the pouch and extract the fire shelter without loss of control of the fire shelter.

U.S. Pat. No. 5,619,955 discloses a device for providing a gripping aid for the tandem passenger of a vehicle is described. The device includes a harness worn by the operator of the vehicle. The harness is secured around the upper region of the operator's torso, and the gripping handles are attached to the harness such that the passenger can be positioned closer to the operator while comfortably gripping the handles. An adjustable, quick release clasp allows the operator to quickly put on, remove, and adjust the harness.

U.S. Pat. No. 5,341,973 discloses a low profile backpack system which includes a mechanism for allowing free movement of the shoulder straps as the wearer moves, bends, twists from side to side, etc. The inventive mechanism comprises a buckle having a pair of transverse elongated slots. The buckle is fixed to the top of the pack by means of a single vertically oriented strap which passes through the lower of the two slots. A second strap passes through the upper slot and has its ends fixed to an end of each of two shoulder straps adapted to fit over the shoulders of the wearer. A additional feature is the provision of a quick release fire shelter on the pack which may be deployed by one hand. The shelter is stored in a rectangularly shaped pouch depending from the bottom of the pack. An open end of the pouch is selectively closed by a flap secured by Velcro fasteners. Pulling a release strap depending from the pouch first disengages the fasteners. Further pulling of the release strap causes the folded safety tent to be ejected from a plastic housing in which it is stored within the pouch.

U.S. Pat. No. 4,943,252 discloses a quickly inflatable survival device for skiers comprising a protective and buoyant plurality of concentric spheres made of flexibly impervious material which is stored uninflated around the waist in a belt pack using a detachable belt, and covered with a detachable flexible cover. To activate when needed, an inflation pull ring connected to a pressure vessel and valve is manually pulled to release a pressurized gas into the chambers between the inner sphere wall and the outer sphere wall, the sphere walls being limited in separation by the use of wall partition segments having air communications openings to allow free air flow throughout the chambers. Immediately after pulling the inflation ring, the person crouches down and the sphere is very quickly and forcefully expanded, detaching the cover, to its inflated spherical configuration and totally encloses the person, providing protection and buoyancy in snow avalanche environments. Deflation is accomplished using the pressure relief valve, then either exit enclosure is opened using the fabric handles and the occupant releases the belt and steps out of the device.

U.S. Pat. No. 4,858,797 discloses a backpack for use in carrying hose, such as fire hose, to locations where it is needed. The backpack includes a rigid metallic frame having at one end a hose support shelf on which at least two spirally coiled rolls of fire hose may be carried. Quickly engageable and releasable straps are provided to bind the coils of fire hose to the back frame, and shoulder straps and a waist strap are provided to suspend the backpack on the back of the wearer. All that is required of the wearer to release and deploy one or more coils of hose from the backpack is to tug on one end of a flexible cable, with the result that the quick-release straps that bind the coils to the frame are released, thus enabling the coils of hose to be deployed by a mere shrug of the shoulders.

However, there remains a need for a material that is resistant to radiant and convective heat. Further, there is a need for an improved emergency fire shelter design that improves the volume to surface area ratio and can be used in a kit by firefighters.

BRIEF SUMMARY OF THE INVENTION

A first embodiment of the invention is a flexible, layered material resistant to radiant and convective heat comprising: at least two aluminum foil layers, at least one silica based cloth layer, and at least one fiberglass cloth layer; wherein the layers are sewn together or bonded with adhesive; wherein a first aluminum foil layer is an outermost layer that faces the radiant and convective heat; and wherein all adhesives are contained between said first aluminum foil layer and said second aluminum foil layer.

Another embodiment of the claimed invention is an emergency fire shelter comprising: a floor and a canopy connected thereto, wherein said floor is oval in shape and

has an opening therein; wherein said canopy is semi-capsular in shape; and wherein said floor and canopy are constructed of a material that is heat and fire resistant.

Another embodiment of the claimed invention is a fire shelter storage system allowing rapid deployment comprising: an emergency fire shelter comprising a floor and a canopy connected thereto, wherein said floor is oval in shape and has an opening therein; wherein said canopy is semi-capsular in shape; and wherein said floor and canopy are constructed of a material that is heat and fire resistant; an outer protective pouch sized to receive the emergency fire shelter unit through an open end of the pouch, the pouch further including a cover detachably covering the open end as retained by a releasable fastener attaching a portion of the cover to a portion of the pouch; and a handle having one end attached to the emergency fire shelter unit and sized so that when the fire shelter unit is received within the pouch and the cover is in place over the opening, the handle may extend out of the pouch adjacent to the releasable fastener to present an exposed end to a user; whereby the emergency fire shelter may be removed from the pouch by applying a force to the handle to release the releasable fastener and extract the fire shelter unit from the pouch.

BRIEF DESCRIPTION OF THE DRAWINGS

FIG. **1** is a cross-sectional view of an embodiment of a flexible, layered material resistant to radiant and convective heat;

FIG. **2** is a perspective view in cut away of a deployed emergency fire shelter;

FIG. **3** is a bottom perspective view of a deployed emergency fire shelter;

FIG. **4** is a side perspective view of a deployed emergency fire shelter;

FIG. **5** is a top perspective view of a deployed emergency fire shelter;

FIG. **6** is a perspective view of a protective pouch having an attached cover and holding an emergency fire shelter, the latter contained in a protective vinyl bag having an attached extraction handle per the present invention;

FIG. **7** is a fragmentary cross-section taken along line **7**—**7** of FIG. **6** showing the pouch of FIG. **6** when closed, prior to deployment, and showing the interfitting of the handle between fasteners of the pouch and cover to engage those surfaces so as to hold the cover closed and to retain the fire shelter in the pouch;

FIG. **8** is a figure similar to that of FIG. **7** showing a pulling outward of the handle during initial stages of deployment of the fire shelter so as to release the cover from the front edge of the pouch, extracting the fire shelter prior to release of the handle from the cover.

DETAILED DESCRIPTION OF THE PREFERRED EMBODIMENT

The preferred embodiment of the subject invention will now be disclosed in detail in conjunction with the figures, wherein like parts are designated by like reference numerals, throughout the several views. While the present inventive fire and heat resistant material is applicable for use in a variety of settings, a preferred embodiment, discussed below, is an emergency fire shelter. More particularly, one of the preferred embodiments is a fire shelter storage system that may be quickly deployed and which contains an emergency fire shelter constructed of the inventive fire and heat resistant material.

In general the inventive material is a flexible, layered material resistant to radiant and convective heat. There must be at least four layers in the inventive material with at least two layers being aluminum foil layers, at least one layer a silica based cloth layer, and at least one layer being a fiberglass cloth layer. The number of each type of layer and the positioning of layers may be varied depending upon the application is which the layered material is to be used. However, the inventive layered material must have the following features.

A first aluminum foil layer is disposed as an outermost layer near a source of radiant and convective heat. The first aluminum foil layer reflects radiant energy. This prevents much of the radiant heat from passing into the layered material below.

Each layer is either sewn to adjoining layers or is bonded to adjoining layers with adhesive. A second aluminum foil layer is positioned such that any adhesive used to bind layers together are located between the first and second aluminum foil layers. Sandwiching all adhesives between the first and second aluminum foil layers prevents gases that may be produced by the heating of adhesives from escaping from the layered material on the side opposite of the radiant and convective heat source. The innermost layer must be non-emitting for thermal radiation. The first and second aluminum foil layers may not be positioned next to one another. Additional aluminum foil layers, however, may be disposed throughout the inventive material.

At least one silica based cloth layer and at least one fiberglass cloth layer must be disposed within the inventive material. The woven silica based cloth layer(s) prevent much of the convective heat from passing through the inventive material while the fiberglass layer(s) provide strength. Additional silica cloth layers and fiberglass layers may be disposed throughout the inventive material.

In use, fire and heat resistant materials operate under two scenarios, no hot gas contact and hot gas contact. The following is an example of such materials used in a fire shelter where there is no hot gas contact. In this sceanrio, the incident energy (radiation) strikes the surface of the shelter. Most, approximately 95%, is reflected back to the environment. The remainder is absorbed and results in a heating of the surface. The temperature of the material (outer aluminum) rises and, because aluminum is a poor radiator, the energy is conducted through to the silica cloth and air spaces within the cloth matrix. Some energy is also lost to the environment (air) because the surrounding air is cooler than the aluminum layer. Silica cloth is a much better radiator so now there are multiple modes of energy transfer in response to a temperature difference between the back side of the aluminum (hot) and the air layer between the inner and outer laminate layers. Energy is transferred across the air space to the inner laminate which in turn rises in temperature. Because the inner layer is now warmer than the interior air in the shelter energy is transferred through the inner layer and the interior aluminum surface becomes warmer. Because it is a very poor radiator, the inner aluminum layer transfers energy to the air inside the shelter via convection.

In contrast, these materials used in a fire shelter where there is hot gas contact (or flame contact), the reflective properties of the outer aluminum layer don't matter as much because the dominant energy transfer mode is convection. Outer layer gets hot and the remaining mechanisms are as with the case above. Things happen much more quickly because the outer layer is now immersed in a hot gas and can

only gain energy from the gas. In hot gas contact scenarios, the energy flow is one way, towards the interior.

A preferred embodiment of the inventive layered material is illustrated in FIG. **1**. Referring now to FIG. **1**, inventive layered material **2** is comprised of an outer shell **4** and an inner shell **6**. Outer shell **4** is constructed of a first aluminum foil layer **8** and a woven silica cloth based layer **10** and is disposed nearest to a fire and/or heat source **12**. First aluminum foil layer **8** serves to reflect radiant heat generated by fire and/or heat source **12**. First aluminum foil layer **8** is between 0.5 to 2.0 mil in thickness, preferably between 0.8 to 1.2 mil, most preferably approximately 1.0 mil in thickness.

First aluminum foil layer **8** is laminated with an adhesive **16** to woven silica based cloth layer **10**. Woven silica based cloth layer **10** prevents much of the convective heat from passing through the inventive material. Woven silica based cloth layer **10** is 6 to 13 oz. cloth, preferably 8 to 12 oz. cloth, most preferable 10 oz. cloth (Although often 10 oz. cloth may weigh in the range of 9 to 11 oz.). Woven silica cloth layer **10** can be obtained through Hi Tech Products, Inc. in Delaware.

Adhesive **16** used to bind layers of outer shell **4** is preferably a high temperature, non-toxic glue. If material **2** is to be used in the construction of an emergency fire shelter, then Adhesive **16** must be a high temperature, non-toxic glue. The preferred adhesive **16** is a high temperature, non-toxic glue proprietary to Cleveland Laminating, Corp. of Cleveland, Ohio.

Inner shell **6** is comprised of a fiberglass cloth layer **18** and a second aluminum foil layer **20**. Maximum flexibility, strength and a low weight is desired when selecting fiberglass cloth layer **18**. Style number 1080-D fiberglass cloth, available commercially, obtained through Cleveland Laminating, Corp. of Cleveland, Ohio is preferred for fiberglass cloth layer **18**. Second aluminum foil layer **20** is laminated with an adhesive **16** to fiberglass cloth layer **18**. Again, a high temperature, non-toxic glue as discussed above is preferred.

Second aluminum foil layer **20** serves to minimize re-radiation of heat that passes through other layers of material **2**. Further, second aluminum foil layer **20** is an innermost layer of material **2** so that any gases produced by the heating of adhesives or other substance (i.e. starches or sizing) are prevented from escaping from material **2** on the side opposite of the fire and/or heat source **12**. Second aluminum foil layer **20** is between 0.5 to 2.0 mil in thickness, preferably between 0.5 to 0.8 mil, most preferably approximately 0.65 mil in thickness.

Outer shell **4** and inner shell **6** are sewn together at seam **24** such that an air gap **26** is created between outer shell **4** and inner shell. Air gap **26** creates additional insulation which further retards the passage of heat toward the inside of material **2**.

The "pup tent" style emergency fire shelters currently in use have flat, triangular ends that are substantially perpendicular to the ground when the shelter is in use. These ends reflect radiant energy to the ground immediately adjacent to the fire shelter and increase the likelihood that fuel in close proximity to the shelter will be ignited. Fires immediately adjacent to the shelter might damage the shelter prior to the arrival of the flame front. The rounded ends of the inventive fire shelter illustrated in FIGS. **2–5** forces much of the radiant heat to be dispersed instead of heating the ground adjacent to the shelter.

The "pup tent" style emergency fire shelters also have a large surface area to volume ratio. This allows more radiant heat to transfer to the material and then into the fire shelter. The inventive fire shelter has a smaller surface area to volume ratio which reduces the amount of heat transfer to the inside of the inventive fire shelter.

Referring now to FIG. **2**, fire shelter **102** is semi-capsular in shape. A fire shelter canopy **103** of fire shelter **102** is made up of a main body **104** and with two shelter ends **106** attached at both ends of main body **104**. Main body **104** is shaped like a half cylinder while two shelter ends **106** are shaped like ¼ spheres. Main body **104** and shelter ends **106** are sewn together along end seams **107**. In the preferred embodiment, main body **104** is constructed of two pieces sewn together at mid-point seam **114**. Structural seams **112** are seams where fabric of main body **104** is folded over and sewn. Structural seams **112**, end seams **107** and mid-point seam **114** limit damage to other areas of fire shelter **102** in the event that one section sustains damage. Shelter end seams **113** allow for shaping of shelter ends **106**.

A floor **118** is sewn to main body **104** at perimeter seam **110** which extends around perimeter of fire shelter **102**. Seam tape **109** is disposed around the entire perimeter of fire shelter **102** and is affixed by perimeter seam **110**. In FIG. **2**, seam tape **109** is not shown on a portion of the perimeter of fire shelter **102** in order to allow a better view of the intersection of perimeter seam **110** with structural seams **112**, end seams **107** and mid-point seam **114** intersect. Floor **118** is shaped like an oval with a hole **120** disposed therein. Hole **120** is preferably rectangular in shape and is used by a firefighter to gain access to fire shelter **102**. More particularly, hole **120** is approximately eight inches in width and fifty-eight inches in length. This affords a firefighter easy access to fire shelter **102** while using their body (not shown) once inside to weigh down fire shelter **102**. Handles **116** are sewn into perimeter seam **110** to aid a firefighter in deploying fire shelter **102**. One of handles **116** is marked to a right hand while a second is marked for a left hand. This ensures that a firefighter deploys fire shelter **102** with hole **120** close to (or facing) the firefighter for quicker entry.

In use, a firefighter deploys fire shelter **102** using handles **116**. A firefighter then enters fire shelter **102** through hole **120**. Because the perimeter of a firefighter's body is greater that the perimeter of hole **120**, the firefighters body secures fire shelter **102** to the ground. In addition, the firefighter would slip his or her arms through straps **123** up to the elbow to positively hold the shelter down. Fire shelter **102** is preferably constructed of a fire and heat resistant material. More preferably, fire shelter **102** is constructed of material **2** described above.

Referring now to FIG. **3**, a view of floor **118** from under fire shelter **102**, floor **118** is made up of various floor pieces **124** that are sewn together at floor seams **122**. Floor **118** has a hole **120** that is preferably rectangular in shape and is used by a firefighter to gain access to fire shelter **102**. More particularly, hole **120** is approximately eight inches in width and fifty-eight inches in length. Floor **118** is sewn to canopy **103** at seam **110** which is also used to attach handles **116** to fire shelter **102**. Floor **118** is constructed of a silica based cloth laminated on each side with an aluminum foil layer. The aluminum foil layer are between 0.5 to 2.0 mil in thickness, preferably between 0.5 to 0.8 mil, most preferably approximately 0.65 mil in thickness. Silica based cloth layer is 5 to 13 oz. cloth, most preferable 6.5 oz. cloth.

Referring now to FIGS. **4** and **5**, canopy **103** of fire shelter **102** is made up of a main body **104** and two shelter ends **106**. Main body **104** and shelter ends **106** are sewn together along end seams **107**. In the preferred embodiment, main body **104**

is constructed of two pieces sewn together at mid-point seam **114**. Structural seams **112** are seams where fabric of main body **104** is folded over and sewn. Structural seams **112**, end seams **107** and mid-point seam **114** limit damage to other areas of fire shelter **102** in the event that one section sustains damage. Shelter end seams **113** allow for shaping of shelter ends **106**. In FIG. **5** only, canopy **103** is sewn to floor **118** (not shown) at perimeter seam **110**.

Referring now to FIG. **6**, a fire shelter assembly **210** includes an outer pouch **212** constructed of nylon duck or the like to provide a generally rectangular volume having an open end **214**. A rigid plastic sleeve **216** fits within the pouch **212** so as to support the pouch **212** against a crushing of its contents. Fitting within the sleeve **216** is the vinyl bag **218** holding within it the fire shelter **102**.

As is understood in the art, the vinyl bag **218** includes pull tabs **222** which may be grasped by the firefighter to rip open the vinyl bag **218** after it is removed from the pouch **212** to thereby free the fire shelter **102**. The upper edge of the vinyl bag **218** is heat-sealed to prevent moisture and other contaminants from contacting the contained fire shelter **102** and produce a lip **224** to which one end of a nylon web **226** may be sewn. Sewing the nylon web **226** to the lip **224** provides a broad-area attachment between the nylon web **226** and the vinyl bag **218** to minimize the chance of a tearing of the vinyl bag **218** from force applied by the nylon web **226**. The vinyl bag **218** is placed in the pouch **212** with the lip **224** extending from the open end **214**.

A cover **228** constructed of the same material as the pouch **212** is sewn along a rear hinging edge to the rear edge of the open end **214** of the pouch **212** so as to move freely between an open position (shown in FIG. **6**) and a closed position (shown in FIG. **7**) where a front lip **230** of the cover **228** passes over a front edge **232** of the pouch **212**. Sewn to an inner surface of the front lip **230** of the cover **228** is hook material **234** such as forms part of a hook-and-loop fabric fastener such as sold under the trade name of Velcro. Corresponding loop material **236** is sewn to the outer surface of the front edge **232** of the pouch **212**.

Referring now to FIGS. **6** and **7**, the nylon web **226** extends upward from the lip **224** of the vinyl bag **218**, as contained in the pouch **212**, and may be folded forward and then downward to pass over the front edge **232** of the pouch **212**. At that point of crossing, hook material **238** may be attached to the nylon web **226** immediately adjacent to the loop material **236** so as to fasten the nylon web **226** releasably against the front edge **232** of the pouch **212**.

The cover **228** may then be closed as shown in FIG. **7** so that the front lip **230** lies over top of the front edge **232** of the pouch **212**, sandwiching the nylon web **226** there between. To the portion of the nylon web **226** adjacent to the hook material **234** on the cover **228** is sewn loop material **240** so as to engage the hook material **234** on the cover **228** and to hold the cover **228** in a closed position via the interconnection of the nylon web **226** with the pouch **212**. A handle portion **242** of the nylon web **226** may extend beyond the cover **228** to the outside of the pouch **212**, permitting a firefighter to grasp the nylon web **226** at the handle portion **242** by sliding a hand (not shown) along the front of the pouch **212**.

Referring still to FIG. **7**, one or more belt or backpack hangers **244** may be attached to the rear side of the pouch **212** according to methods well known in the art, to suspend the pouch **212** from a belt or backpack.

Referring now to FIG. **8**, the handle portion **242** may be pulled away from the front edge **232** of the pouch **212** and outward toward the open end **214** of the pouch **212** so as to release the loop material **236** on the pouch **212**, and forming half of a releasable connector from the hook material **238** on the nylon web **226**, thereby opening cover **228** as shown in FIG. **8**. Further outward motion of the handle portion **242** detaches loop material **240** attached to nylon web **226** from hook material **234** attached to the front lip **230** of the cover **228**, wholly releasing the nylon web **226** from the cover **228** and pouch **212**. Further outward motion completely extracts the vinyl bag **218** from the pouch **212** while maintaining the fire shelter **102** in control of the firefighter via the handle portion **242**.

The web **226** and/or handle portion **242** may then be used as one point of purchase for the gripping and tearing away of pull tabs **222** at the site of deployment. At this time, the backpack holding the pouch **212** will have been abandoned and a second hand will be available.

Referring still to FIG. **8**, in actual use, the fire shelter **102** does not come out of the sleeve **216** until hook material **234** and loop material **240** release, but is shown lifted from the sleeve **216** for clarity.

In the closed configuration of FIG. **7**, prior to deployment, it will be understood that the vinyl bag **218** holding the fire shelter **102** is secured by two paths of contact to the firefighter, either directly to the pouch **212** (attached to the firefighter by belt loops or via the firefighter's backpack) or to the pouch **212** via the cover **228**. Generally, the forces on the fire shelter **102** against the cover **228** during normal activity of the firefighter will act on the materials **234**, **240**, **238** and **236**, in a shearing direction, against which such fasteners are strongest. In contrast, outward motion as indicated in FIG. **7** of the handle portion **242** peels away loop material **236** from hook material **238** in a manner requiring less force. Thus accidental deployment of the fire shelter **102** is reduced. The possibility of accidental opening of the cover **228** by handle portion **242** catching on brush or the like is further reduced by the smooth end of handle portion **242**, which may be a rolled seam and the flexibility of the handle portion **242**.

Further, should the cover **228** be accidentally opened, the fire shelter **102** will retain, for a period of time, its connection with the cover **228** through hook and loop materials **234** and **240**, increasing the chance that such an accidental deployment will be detected and reducing the chance that the fire shelter **102** will simply fall out on the ground unnoticed.

The invention being thus described, it will be obvious that the same may be varied in many ways. Such variations are not to be regarded as a departure from the spirit and scope of the invention and all such modifications are intended to be included within the scope of the following claims.

We claim:

1. An emergency fire shelter comprising:

a floor and a canopy connected thereto,

wherein said floor is oval in shape and has an opening therein for a person to gain access to the fire shelter;

wherein said canopy is semi-capsular in shape having a main body shaped like a half cylinder, and two ends shaped like ¼ spheres; and wherein said floor and canopy are constructed of a material that is heat and fire resistant.

2. The emergency fire shelter of claim **1**, wherein said material is comprised of at least two layers.

3. The emergency fire shelter of claim **2**, wherein said material has at least two aluminum foil layers, at least one silica based cloth layer, and at least one fiberglass cloth layer;

wherein the layers are sewn together or bonded with adhesive;

wherein a first aluminum foil layer is an outermost layer which faces the radiant and convective heat; and

wherein all adhesives are contained between said first aluminum foil layer and said second aluminum foil layer.

4. The emergency fire shelter of claim **3**, wherein said material is comprised of an outer shell and an inner shell, wherein said outer shell containing said first aluminum foil layer which is disposed nearest to the heat, and said inner shell containing said second aluminum foil layer.

5. The emergency fire shelter of claim **4**, wherein said outer shell is comprised of said first aluminum foil layer laminated to said silica based cloth;

wherein said inner layer is comprised of said second aluminum foil layer and said fiberglass cloth layer sewn together or bound with adhesive; and

wherein said inner and out layers are sewn together.

6. The emergency fire shelter of claim **5**, wherein said first aluminum foil layer and said second aluminum foil layer are 0.5 to 2.0 mils in thickness and said silica based cloth is 6 to 13 ounce cloth.

7. The emergency fire shelter of claim **3**, wherein said first aluminum foil layer is 0.8 to 1.2 mils in thickness, said second aluminum foil layer is 0.5 to 0.8 mils in thickness and said silica based cloth is 9 to 11 ounce cloth.

8. The emergency fire shelter of claim **3**, wherein said first aluminum foil layer is approximately 1.0 mil in thickness, said second aluminum foil layer is approximately 0.65 mil in thickness and said silica based cloth is 10 ounce cloth.

9. In a fire shelter for protecting a user in the presence of fire, including a flexible, layered canopy resistant to radiant and convective heat, wherein the canopy is connected to a floor having an elongated opening formed therein for a person to gain access to the fire shelter, the improvement comprising:

said canopy defining a main body portion having the shape of a half cylinder connected between two ends shaped like ¼ spheres.

10. The improvement recited in claim **9**, wherein said canopy is formed from a material comprised of at least two layers.

11. The improvement recited in claim **10**,

wherein said material has at least two aluminum foil layers, at least one silica based cloth layer, and at least one fiberglass cloth layer;

wherein the layers are sewn together or bonded with adhesive;

wherein a first aluminum foil layer is an outermost layer which faces the radiant and convective heat, and a second aluminum foil layer is an innermost layer; and

wherein all adhesives are contained between said first aluminum foil layer and said second aluminum foil layer.

12. The emergency fire shelter of claim **11**, wherein said material is comprised of an outer shell and an inner shell, wherein said outer shell containing said first aluminum foil layer which is disposed nearest to the heat, and said inner shell containing said second aluminum foil layer.

13. The emergency fire shelter of claim **12**, wherein said outer shell is comprised of said first aluminum foil layer laminated to said silica based cloth;

wherein said inner layer is comprised of said second aluminum foil layer and said fiberglass cloth layer sewn together or bound with adhesive; and

wherein said inner and out layers are sewn together.

14. The emergency fire shelter of claim **13**, wherein said first aluminum foil layer and said second aluminum foil layer are 0.5 to 2.0 mils in thickness and said silica based cloth is 6 to 13 ounce cloth.

15. The emergency fire shelter of claim **11**, wherein said first aluminum foil layer is 0.8 to 1.2 mils in thickness, said second aluminum foil layer is 0.5 to 0.8 mils in thickness and said silica based cloth is 9 to 11 ounce cloth.

16. The emergency fire shelter of claim **11**, wherein said first aluminum foil layer is approximately 1.0 mil in thickness, said second aluminum foil layer is approximately 0.65 mil in thickness and said silica based cloth is 10 ounce cloth.

* * * * *