US006551007B2

(12) **United States Patent**
Lichtenberg et al.

(10) **Patent No.: US 6,551,007 B2**
(45) **Date of Patent: Apr. 22, 2003**

(54) **JOINT FOR CONNECTING WOOD MEMBERS**

(75) Inventors: **Gary J. Lichtenberg**, Madison, WI (US); **John R. Erickson**, Madison, WI (US); **Robert Ross**, Madison, WI (US); **Dwight Flach**, Madison, WI (US)

(73) Assignee: **The United States of America as represented by the Secretary of Agriculture**, Washington, DC (US)

(*) Notice: Subject to any disclaimer, the term of this patent is extended or adjusted under 35 U.S.C. 154(b) by 0 days.

(21) Appl. No.: **09/892,236**

(22) Filed: **Jun. 28, 2001**

(65) **Prior Publication Data**

US 2002/0034416 A1 Mar. 21, 2002

Related U.S. Application Data

(60) Provisional application No. 60/222,175, filed on Aug. 1, 2000, and provisional application No. 60/222,210, filed on Aug. 1, 2000.

(51) **Int. Cl.**[7] **F41B 5/02**

(52) **U.S. Cl.** **403/270**; 403/272; 403/268; 273/416

(58) **Field of Search** 403/270, 271, 403/272, 267, 268

(56) **References Cited**

U.S. PATENT DOCUMENTS

1,394,137 A	*	10/1921	Blair	403/268 X
4,274,756 A		6/1981	Lange	
4,305,588 A	*	12/1981	Dodge	403/268 X
4,492,489 A		1/1985	Kantorowich	
4,493,582 A	*	1/1985	Drabsch	403/267 X
4,981,388 A		1/1991	Becken et al.	
5,499,667 A		3/1996	Nakanishi	
5,636,934 A		6/1997	Nakanishi et al.	
5,985,415 A		11/1999	Giltner	
6,041,837 A		3/2000	Hanson	

OTHER PUBLICATIONS

"Traditional Archery" by Doug Besherse website http://domino.htcomp.net/bhn/Columnists.nsf/d731dec9a6178218862565900006 46df/d4f89e807155f5b28625661300748ec2?OpenDocument, Aug. 29, 1999.*

* cited by examiner

Primary Examiner—Lynne H. Browne
Assistant Examiner—John Cottingham
(74) *Attorney, Agent, or Firm*—John D. Fado; Janet I. Stockhausen

(57) **ABSTRACT**

A self-centering and self-aligning joint is presented for bonding a first and second wood segment, wherein the joint includes a single tenon extending from the end face of the first segment, and a void disposed within the end face of the second segment. And adhesive is applied to the outer surface of the tenon, or to the inner surface of the void to join the two segments.

13 Claims, 3 Drawing Sheets

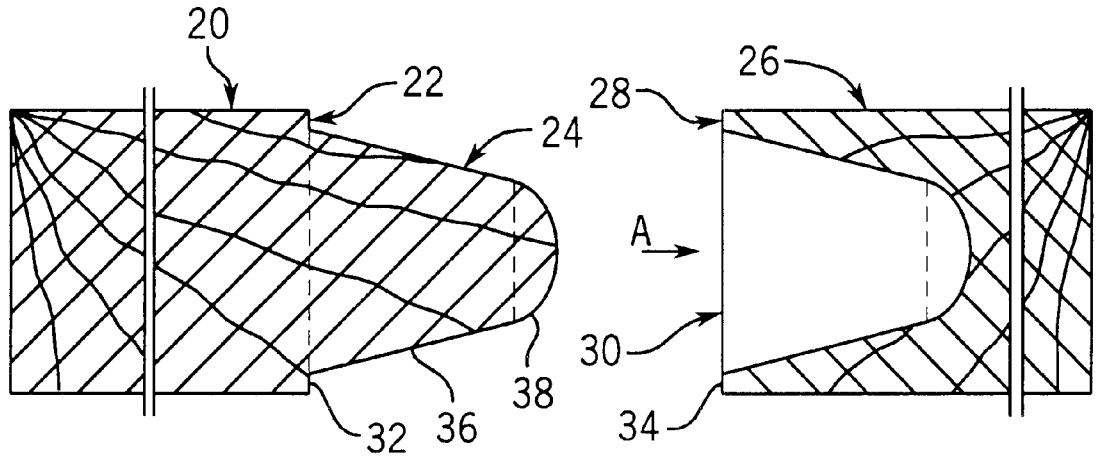

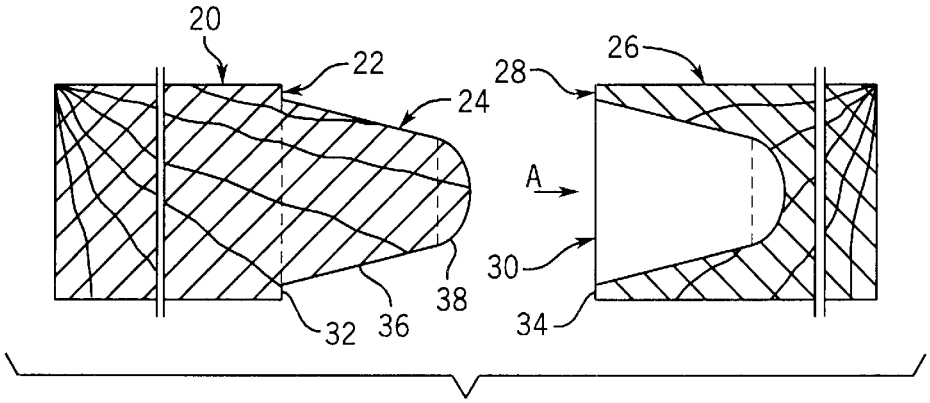

FIG. 1

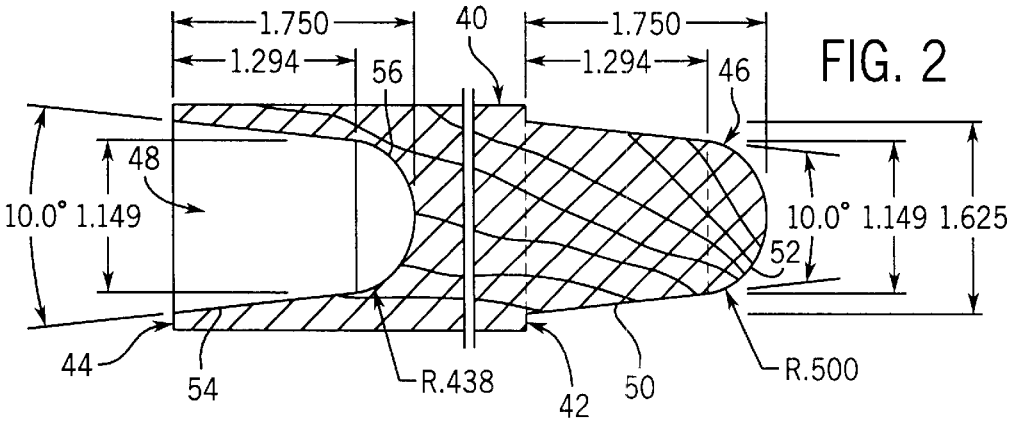

FIG. 2

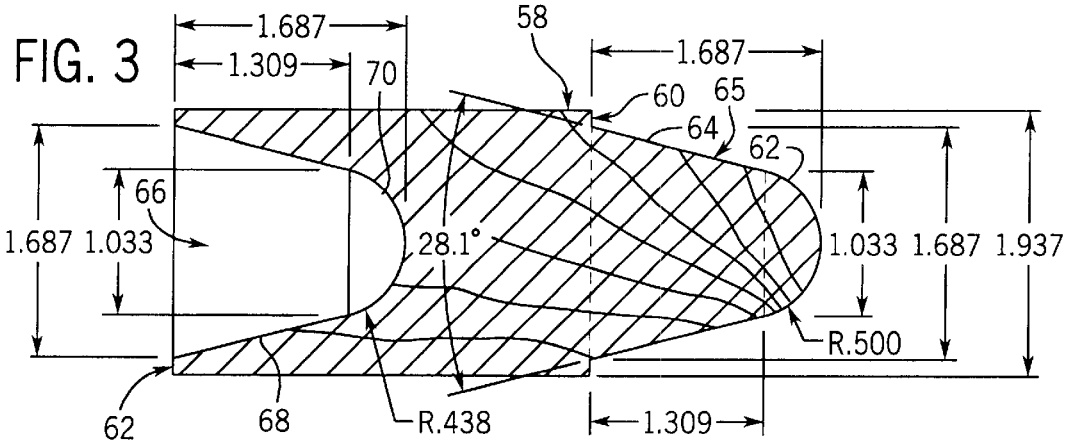

FIG. 3

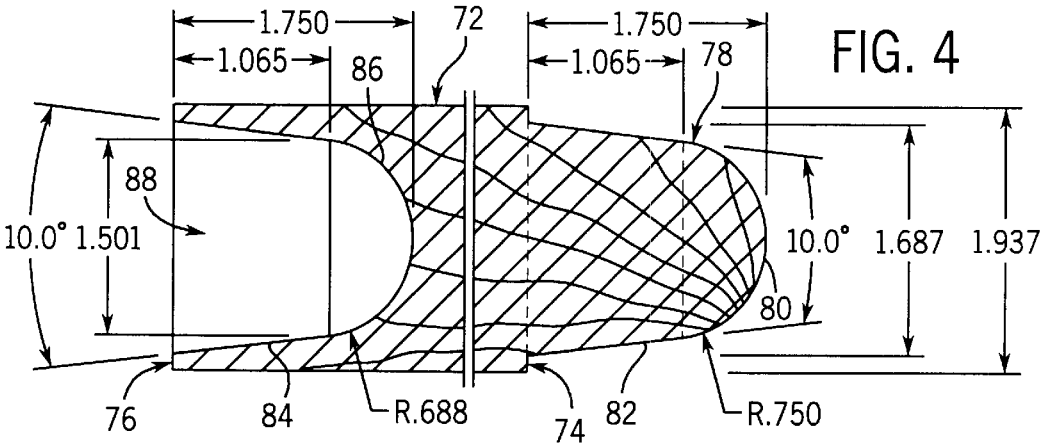
1.750
1.065
72
86
1.750
1.065
78
88
10.0°
1.501
10.0°
1.687
1.937
80
76
84
R.688
74
82
R.750

FIG. 4

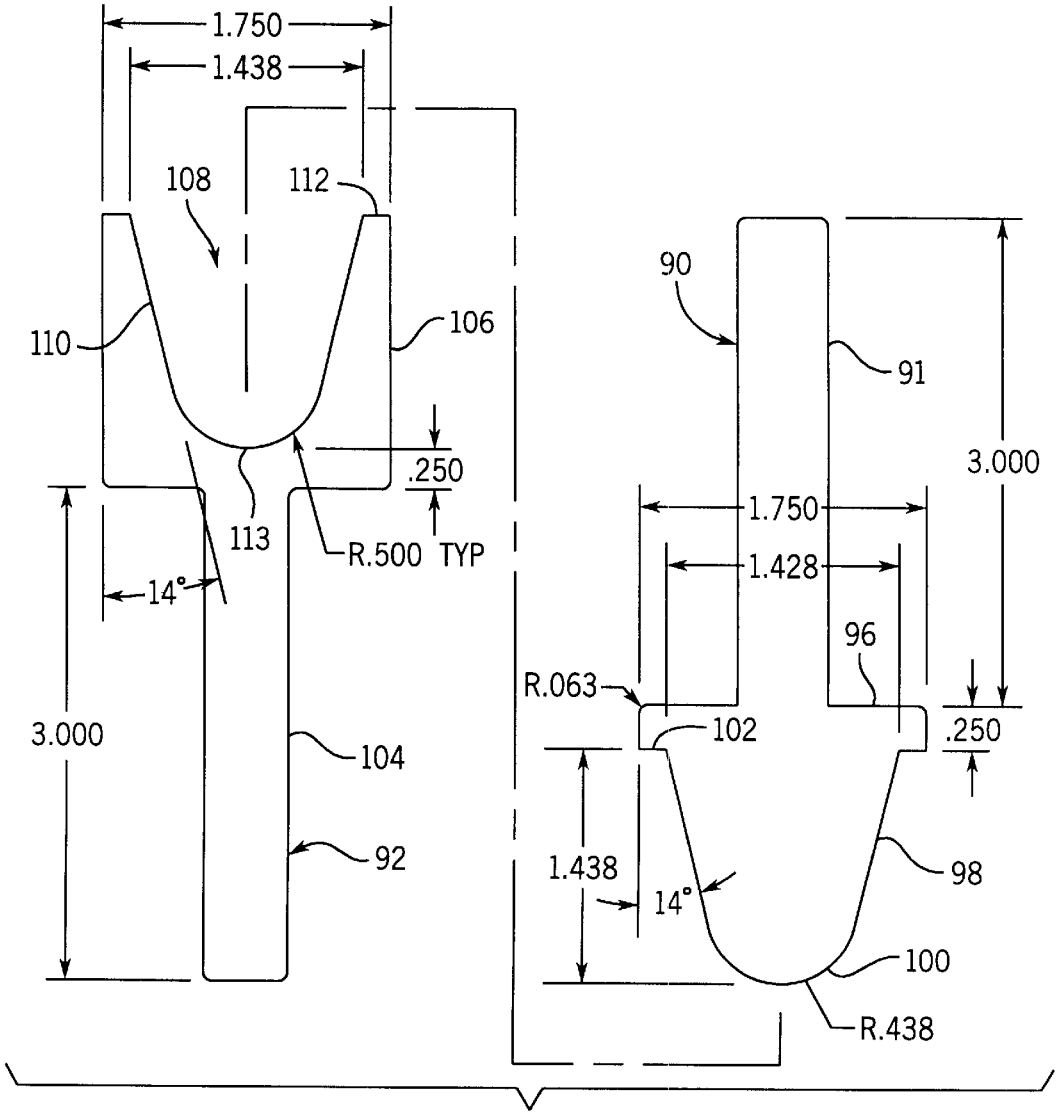
1.750
1.438
108
112
110
106
.250
113
R.500 TYP
14°
3.000
104
92
90
91
3.000
1.750
1.428
96
R.063
102
.250
1.438
14°
98
100
R.438

FIG. 5A

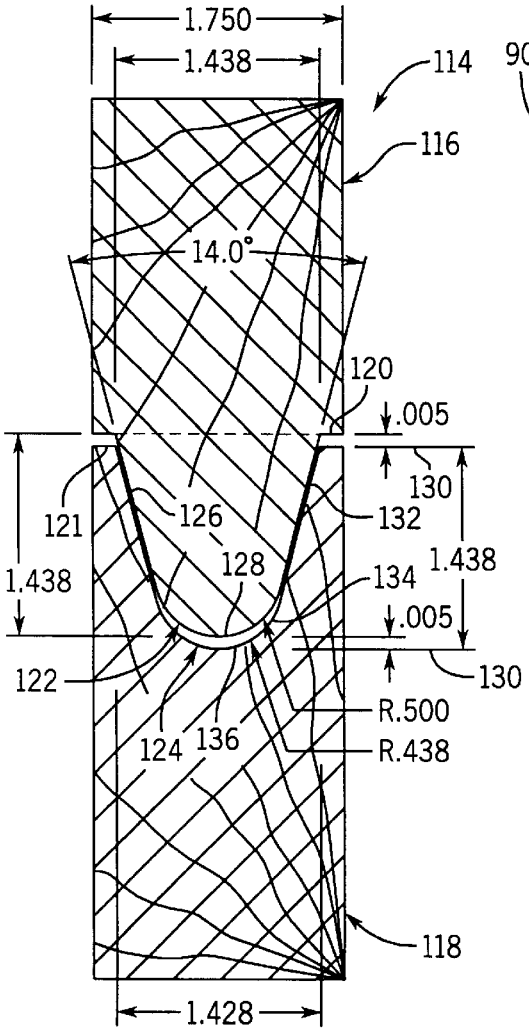
1.750
1.438
114
116
14.0°
120
.005
130
121
126
132
1.438
128
134
1.438
.005
122
130
R.500
124
136
R.438
118
1.428

FIG. 5B

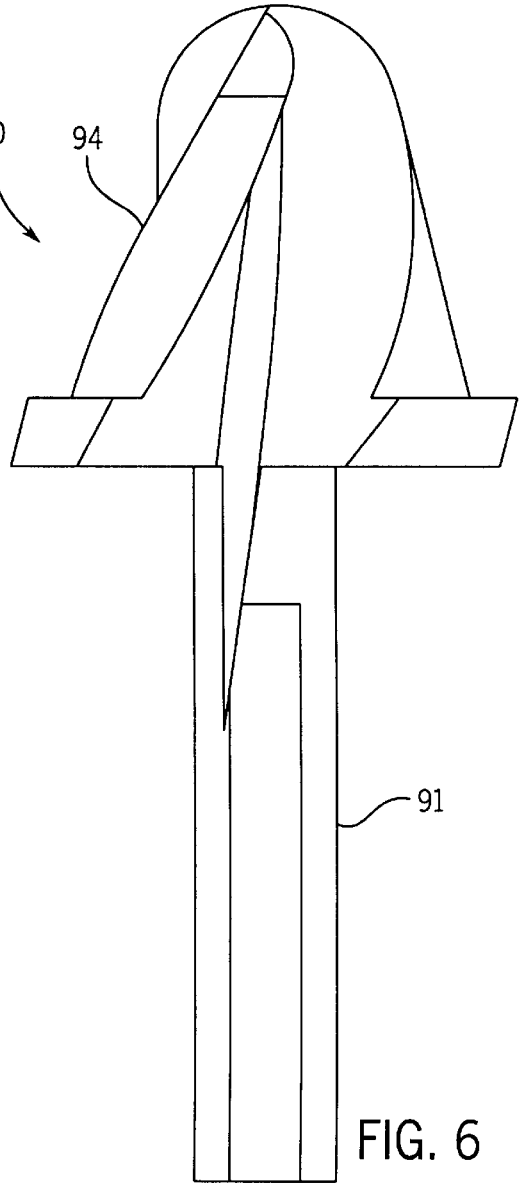
90
94
91

FIG. 6

JOINT FOR CONNECTING WOOD MEMBERS

CROSS-REFERENCE TO RELATED APPLICATIONS

This application claims priority to provisional patent application U.S. Ser. No. 60/222,175, entitled "Small Diameter Concentric Finger Joint" and filed on Aug. 1, 2000, and further claims priority to provisional application U.S. Ser. No. 60/222,210, entitled "Improved Finger-Joint in Finger Jointed Lumber" and filed on Aug. 1, 2000, the disclosures of which are hereby incorporated by reference as if set forth in their entirety herein.

STATEMENT REGARDING FEDERALLY SPONSORED RESEARCH OR DEVELOPMENT

BACKGROUND OF THE INVENTION

The present invention relates generally to jointed timber, and in particular, related to an improved joint for connecting a first and second wood segment to produce a finished unitary wood product.

When end-joining two segments of timber to produce a finished wood product, it is desirable to produce a joint having sufficient strength and desirable aesthetic characteristics. Conventional end joints for timber include a plurality of fingers that extend outwardly from the end faces of the two segments of timber that are to be joined. In particular, the fingers may either extend linearly across the end face, or may be separated from one another in both the first and second dimensions defining the face. The fingers are of equal length, and intermeshed such that the addition of adhesive within the joint bonds the two segments together. This type of joint is described, for example, in U.S. Pat. No. 5,985,415.

While such joints have been shown to be relatively effective for wood segments having a square or rectangular cross section, their effectiveness is greatly reduced when joining timber segments having a round cross section. For example, when traditional finger joints are used to join the rounded ends of two timber segments, poor strength characteristics have resulted, thereby facilitating premature failure of the joint. The deficiencies in bonding strength are exacerbated when joining two round timber segments having a relatively small diameter that inherently presents a reduced bonding surface area. Furthermore, conventional finger joints present a reduced bonding area near the outer periphery of the round cross section, which is where the stresses experienced by the joint are typically greatest. As a result, finger joints are unacceptable when fabricating tool handles, which typically experience high stresses during normal operation.

The weak bond that is produced by conventional joints applied to round wood segments is further incapable of providing a reliable joint for low-grade timber. Accordingly, excess volumes of low-grade timber remain unharvested in the forest. This constitutes a waste of a potentially valuable resource, and additionally presents a greater potential for overly intense forest fires. Furthermore, conventional finger joints applied to timber having round cross sections produce jagged and aesthetically displeasing joint lines that often include visible glue lines. Therefore, finger joints are often only used for surfaces that will be painted, which is not acceptable for many end use applications that are stained or varnished, such as stair banisters.

Another disadvantage associated with conventional finger joints is the difficulty associated with their fabrication. The

finger joints must be manufactured within tight tolerance to ensure that the two end faces are properly aligned when the joint is assembled. Furthermore, complex tooling is required to producing a plurality of fingers in each end face in both the first and second dimensions of the end face, adding expense to the fabrication process.

What is therefore needed is a joint for connecting two timber segments having a round cross section that has improved strength characteristics, and that produces an aesthetically appealing joint.

BRIEF SUMMARY OF THE INVENTION

The present invention recognizes that a joint may be produced that has enhanced strength and aesthetic qualities, is self-aligning, and is easier and less expensive to produce compared to conventional joints.

In accordance with one aspect of the invention, a joint for bonding a first axially extending wood segment presenting a first end face to a second axially extending wood segment presenting a second end face comprises 1) a single protrusion extending axially outwardly from the first end face and centered on the first end face, 2) a single void defined by an inner wall of the second wood segment, wherein the void extends axially inwardly from second end face and is centered with respect to the second end face, and wherein the void is sized to receive the protrusion therein, and 3) an adhesive disposed at an interface between the protrusion and the inner wall of the second wood segment to join the first and second wood segments together.

This and other aspects of the invention are not intended to define the scope of the invention for which purpose claims are provided. In the following description, reference is made to the accompanying drawings, which form a part hereof, and in which there is shown by way of illustration, and not limitation, preferred embodiments of the invention. Such embodiments do not define the scope of the invention and reference must therefore be made to the claims for this purpose.

BRIEF DESCRIPTION OF THE DRAWINGS

Reference is hereby made to the following figures in which like reference numerals correspond to like elements throughout, and in which:

FIG. **1** is a sectional side elevation view of two wooden segments to be joined in accordance with the present invention;

FIG. **2** is a sectional side elevation view of a wood segment including first and second end faces presenting concave and convex mating surfaces constructed in accordance with a preferred embodiment of the invention;

FIG. **3** is a sectional side elevation view of a wood segment including first and second end faces presenting concave and convex mating surfaces constructed in accordance with a preferred embodiment of the invention;

FIG. **4** is a sectional side elevation view of a wood segment including first and second end faces presenting concave and convex mating surfaces constructed in accordance with a preferred embodiment of the invention;

FIG. **5**A is a side elevation view of the tooling used to produce the joint in accordance with the preferred embodiment of the invention; and

FIG. **5**B is a sectional side elevation view of a unitary wood product formed from wood segments joined in accordance with the preferred embodiment using the tooling illustrated in FIG. **5**A.

FIG. **6** is a side elevation view of the male cutter illustrated in FIG. **5**A.

DETAILED DESCRIPTION OF THE INVENTION

Referring initially to FIG. **1**, a first wood segment **20** includes an end face **22** having a single tenon **24** protruding outwardly therefrom. In particular, tenon **24** is substantially symmetrical about a central line extending through and bisecting the center of wood segment **20** perpendicular to end face **22**. A second wood segment **26** includes an end face **28** having a single void **30** disposed therein that is sized to receive the tenon **24** therein. Void, or socket, **30** is generally symmetrical about the center line extending axially through and bisecting segment **26** perpendicular to end face **28**. Adhesive is applied to the tenon **24** and/or void to bond the two segments **20** and **26** together when held under pressure. In particular, tenon **24** is inserted into the socket **30** in the direction of arrow "A" such that the wood segments **20** and **26** become aligned, and the resulting joint is self-centered, as will be described in more detail below. The resulting joint presents a greater surface area that is joined compared to the bonding of two flat surfaces, thereby producing a stronger bond. While first and second wood segments **20** and **26**, respectively, are described herein as having a round cross-section, it should be appreciated that they may comprise any configuration whatsoever that is capable of having a tenons **24** and sockets **30** formed in their respective end faces. For example, the segments **20** and **26** may have an oval or rectangular cross-section.

It should be further appreciated that tenon **24** and socket **30** may comprise one of many geometrical shapes such that the void is operable to receive the tenon therein to join the two wood segments. In accordance with the preferred embodiment, the mouth of tenon **24** does not span the entire width of end face **22**, but rather sits on an outer annular flange **32** that circumscribes the base of tenon **24**. Correspondingly, mouth of socket **30** is defined by outer lips **34** that abut flange **32** when the wood segments **20** and **26** are joined. As a result, a smooth joint line is produced when the two segments are bonded. Tenon **24** is an annular member whose mouth has a diameter that decreases as the distance from end face **22** increases, thereby producing a frusto-conical base member **36**. Tenon **24** further includes an outer member **38** comprising an arc that is disclosed at the outermost surface of base member **36**. Socket **30** has substantially the same size and shape of tenon **24** to ensure that the resulting joint is aligned and centered. Furthermore, the mouth of socket **30** is significantly wider than the outer arc **38** of tenon **24**. As a result, tenon **24** may be easily inserted into void **30**, and as the tenon is further inserted, the walls of base member **36** are guided by the side walls that define socket **30** such that the joint is self-aligning. Accordingly, the joint in accordance with the preferred embodiment is easy to assemble.

It is appreciated from FIGS. **2**–**4** that the tenon **24** and socket **30** may be constructed having various geometrical configurations. While preferred geometries are illustrated, it should be appreciated to those having ordinary skill in the art that any suitable configuration may be used in accordance with the present invention that allows a single tenon of a first wood segment to be received by a corresponding socket of a second wood segment to produce an aligned and centered joint. For example, the socket **30** and tenon **24** may be oval or rectangular-shaped in cross section instead of circular as illustrated in accordance with the preferred embodiment. The dimensions of the illustrated embodiments are shown for to illustrate various embodiments of the invention, it being understood that these dimensions may differ greatly from one application to another without departing from the present invention.

Referring now to FIG. **2** in particular, the dimensions in inches are specified for a single wood segment **40** extending in an axial direction and including first and second oppositely disposed end faces **42** and **44**, respectively, that extend radially. Segment **40** is usable as an intermediate wood segment connecting two other wood segments at its opposing two end faces **42** and **44**. A tenon **46** protrudes outwardly from first end face **42**, and a socket **48** is formed within second end face **44**. In particular, the dimensions of wood segment **20** are illustrated such that the tenon **46** would be received by a socket of a corresponding wood segment having the dimensions of socket **48** illustrated in FIG. **2**. Correspondingly, socket **48** would receive a tenon of a mating wood segment having the dimensions of tenon **46**. Of course, if segment **40** is to be used as an end segment of a finished wood product, the exposed end face would not include the tenon **46** or socket **48**.

The wood segment as illustrated has an outer diameter of 1.625 inches. It should be appreciated that, while wood segment **40** is annular in accordance with the preferred embodiment, it may be rectangular, or possess any alternative geometric configuration operable to form tenon **46** and/or socket **48** in its end face. As described above, tenon **46** includes an inner frusto-conical base member **50** integrally connected to an arc-shaped outer tip **52**. The side walls of base member **50** form a 10 degree angle with respect to the axial direction. In accordance with the illustrated embodiment, the tenon has an overall axial length of 1.75 inches, while the axial length of frusto-conical base member **50** is 1.294 inches. The diameter of the tenon **46** at the tip of base member **50**, which is also the base of tip **56**, is 1.149 inches. The tip **56** is formed from an arc of a sphere having a radius of 0.5 inch.

Socket **48** has dimensions similar to those of tenon **46**, and includes an outer frusto-conical base member **54** and an arch-shaped inner tip **56** that are configured to receive therein a tenon including the base member **50** and tip **52** of tenon **46**. In particular, the overall axial length of socket **48** 1.75 inches, and base member **54** has an axial length of 1.294 inches. The diameter of socket **48** at the tip of base member **50** is 1.149 inches. The outer walls defining base member **68** form a 10° angle with respect to the axial direction. The only dimension of the socket **48** not corresponding to the tenon is the radius that defines tip **56**. Specifically, tip **56** is formed from an arc of a sphere having a radius of 0.438 inches, as opposed to the 0.5 inch corresponding to tip **52** of tenon **46**. As a result, and as will be illustrated in more detail below, tenon **46** is self-aligned and centered within a corresponding socket such that a gap between the corresponding walls of the tenon and socket **48**. This gap provides a void that will be occupied by the adhesive that is used to bond the wood segments. As a result, the gap minimizes adhesive squeeze-out during assembly.

Referring now to FIG. **3**, a wood segment **58** includes first and second end faces **60** and **62**, respectively, having a corresponding tenon **65** and socket **66** constructed in accordance with an alternate embodiment of the invention. In particular, while the geometry in accordance with this embodiment is structurally similar to the embodiment illustrated in FIG. **2**, the dimensions of the corresponding elements differ. For example, the outer diameter of segment **58** is 1.937 inches. The overall axial length of tenon **65** is 1.687 inches and the axial length of base member **64** is 1.309

inches. The side walls of base member **64** form a 28.1 degree angle with respect to the axial direction. The diameter of the tenon **65** at the tip of base member **64**, which is also the base of tip **62**, is 1.033 inches. The tip **62** is formed from an arc of a sphere having a radius of 0.5 inch.

Socket **66** has dimensions similar to those of tenon **65**, and includes an outer frusto-conical base member **68** and an arch-shaped inner tip **70** that are configured to receive therein a tenon including the base member **64** and tip **62** of tenon **65**. In particular, the overall axial length of socket **66** is 1.687 inches, and base member **68** has an axial length of 1.309 inches. The diameter of socket **66** at the tip of base member **68** is 1.033 inches. The side walls of base member **68** form an angle of 28.1 degrees with respect to the axial direction. The only dimension of the socket **66** not corresponding to tenon **65** is the radius that defines the tip **70**. Specifically, tip **70** is formed from an arc of a sphere having a radius of 0.438 inches. As a result, as described above, an adhesive-absorbing gap is produced when a socket and tenon having these dimensions are bonded.

Referring now to FIG. **4**, a wood segment **72** includes first and second end faces **74** and **76**, respectively, having a corresponding tenon **78** and socket **88** constructed in accordance with an alternate embodiment of the invention. In particular, while the geometry in accordance with this embodiment is structurally similar to the embodiments illustrated in FIGS. **2** and **3**, the dimensions of the corresponding elements differ. For example, the outer diameter of wood segment **72** is 1.937 inches, as is also illustrated in FIG. **3**. The overall axial length of tenon **78** is 1.75 inches and the axial length of base member **82** is 1.065 inches. The side walls of base member **82** form a 10° angle with respect to the axial direction. The diameter of the tenon **78** at the tip of base member **82**, which is also the base of tip **80**, is 1.687 inches. The tip **80** is formed from an arc of a sphere having a radius of 0.75 inch.

Socket **88** has dimensions similar to those of tenon **78**, and includes an outer frusto-conical base member **84** and an arch-shaped inner tip **86** that are configured to receive therein a tenon having the dimensions of base member **82** and tip **80** of tenon **78**. In particular, the overall axial length of socket **88** is 1.75 inches, and base member **84** has an axial length of 1.065 inches. The diameter of socket **88** at the tip of base member **84** is 1.501 inches. The side walls of base member **84** form an angle of 10° with respect to the axial direction. The only dimension of the socket **88** not corresponding to tenon **78** is the radius that defines the tip **86**. Specifically, tip **86** is formed from an arc of a sphere having a radius of 0.688 inches which, again, is slightly smaller than the radius that defines tip **80** of tenon **78**. Accordingly, as described above, adhesive squeeze-out is minimized during assembly.

Referring now to FIG. **5**A, an axially extending male and female cutter **90** and **92** are schematically illustrated for producing sockets and tenons, respectively, in accordance with the preferred embodiment, having dimensions that are configured to produce a gap between the mating surfaces as described above. The cutters **90** and **92** may comprise any suitable material having properties suitable for forming the joint, and may include a plurality of helical flutes **94** to aid in wood chip removal during fabrication, as illustrated with reference to the male cutter in FIG. **6**. While the dimensions of the cutters **90** and **92** are illustrated in FIG. **5**, it should be appreciated that any suitable dimensions may be used that are sufficient to produce a tenon and corresponding socket, as described above.

Male cutter **90** includes a 3 inch long shank **91**, which may include three flats to prevent rotation if a chuck is used rather than a collet. Cutter **90** further includes an annular shoulder **96** integrally connected to a frusto-conical member **98** having an arc-shaped end **100** protruding outwardly therefrom that is configured to bore into an end face of a wood segment to produce socket **30**. Frusto-conical member **98** sits on base **96** such that an outer flange **102** circumscribes member **98** and produces outer lips **34** illustrated in FIG. **1**. The base member **96** has a diameter of 1.75 inches and a length of 0.25 inches, and member **98** has a diameter of 1.428 inches at its mouth. The axial length of members **98** and **100** combined is 1.438 inches, and the walls defining member **98** form a 14° angle with respect to the axial direction. End **100** is formed from an arc of a sphere having a radius of 0.438 inches.

The female cutter **92** includes a 3 inch long shank **104** having an annular member **106** that is configured to cut into an end face of a wood segment to produce a tenon **24**. Member **106** includes a flange **112** that defines the mouth of a void **108** defined by a frusto-conical wall **110** and an arc-shaped end **113**. The dimensions if female cutter **92** are similar to those defining male cutter **90**, except that end **113** is formed from a sphere having a radius of 0.5 inches.

Referring now to FIG. **5**B, a unitary wood product **114** extending in an axial direction is formed from two wood segments **116** and **118** joined in accordance with the preferred embodiment using the tooling illustrated in FIG. **5**A. In particular, segment **116** includes an end face **120** having a responding tenon **122** protruding therefrom, and segment **118** has a socket **124** formed therein. It will be appreciated that tenon **122** and socket **124** have dimensions corresponding to the dimensions of the female and male cutters **92** and **90**, respectively.

For example, the outer diameter of wood product **116** is 1.750 inches. The overall axial length of tenon **122** is 1.438 inches, which includes frusto-conical base member **126** and arc-shaped end **128**. End **128** is formed from a sphere having a radius of 0.5 inches. The side walls of base member **126** form a 14° angle with respect to the axial direction, and the diameter of the tenon **122** adjacent the end face **120** is 1.438 inches. It will be appreciated from the description of the socket **124** that the radius corresponding to end **120** as well as the diameter of tenon **122** adjacent end face **120** differs from the corresponding portion of the socket, thereby producing a gap **130** therebetween. As described above, the gap may be filled with adhesive that bonds the two segments **116** and **118** together such that minimal adhesive leakage is experienced with assembling wood product **114**.

The outer diameter of wood segment **118** is also 1.750 inches, which includes an outer frusto-conical member **132** and an arc-shaped inner tip **134** formed within an end face **121** that are configured to receive tenon. The overall axial length of socket **88** is 1.438 inches, and the side wall forming base member **132** forms a 14° angle with respect to the axial direction, corresponding to tenon **122**. The diameter of socket at the mouth of member **132** is 1.428 inches, and the arc shaped inner tip **134** is formed from a sphere having a radius of 0.438 inches. Because the diameter of the mouth is less than the diameter of tenon **122** adjacent end face **120**, a the gap **130** is produced at the interface between end faces **120** and **121**. Additionally, because the radius corresponding to end **128** is larger than the radius corresponding to end **134**, a second gap **136** is produced at the interface between ends **128** and **134**. Both gaps **130** and **136** provide a pocket within the joint to retain the adhesive that is used to bond segments **116** and **118**.

It should thus be appreciated that the single tenon and socket are easier to manufacture than conventional methods

that employ a plurality of intermeshing fingers to end-join two segments of timber. Because fewer intermeshing parts are present in accordance with this invention, the frequency of errors in alignment due to tolerance in manufacturing is greatly reduced. Additionally, the joint is self-aligning and merely requires the insertion of a tenon into a socket under pressure rather than the alignment of a plurality of individual fingers and corresponding recesses.

The strength of wood products that were fabricated from two segments joined using the tenon-and-socket relationship in accordance with the present invention were tested. In particular, a tensile force was applied to maple and ash wood products and the strength of the joint, in PSI, was determined. The results, illustrated below in Table 1 illustrate the superior strength of the resulting joint given the fact that no attempt was made to optimize the performance of the adhesive used during these tests. An average strength value is set forth for each species, followed by the range obtained from several samples. Those having ordinary skill in the art appreciate that the performance of the joint would be much improved by optimizing the pH, buffering capacity, viscosity, and cure rate of the adhesive.

TABLE 1

Wood Species	Average Joint Strength (PSI)	Range of Joint Strength (PSI)
Maple	11,000	8,400–16,700
	9,328	6,000–14,000

The invention has been described in connection with what are presently considered to be the most practical and preferred embodiments. However, the present invention has been presented by way of illustration and is not intended to be limited to the disclosed embodiments. Accordingly, those skilled in the art will realize that the invention is intended to encompass all modifications and alternative arrangements included within the spirit and scope of the invention as set forth by the appended claims.

We claim:

1. A joint for bonding a first axially extending wood segment presenting a first end face to a second axially extending wood segment presenting a second end face, the joint comprising:

a single protrusion extending axially outwardly from the first end face and centered on the first end face, said protrusion having a smooth surface;

a single void defined by an inner wall of the second wood segment, wherein the void has a smooth surface, extends axially inwardly from the second end face and is centered with respect to the second end face, and wherein the void is sized to receive the protrusion therein; and

an adhesive disposed at an interface between the protrusion and the inner wall of the second wood segment to join the first and second wood segments together.

2. The joint as recited in claim **1**, wherein the protrusion comprises a frusto-conical member disposed proximal the first end face and an arc-shaped tip integrally connected to a distal surface of the frusto-conical member.

3. The joint as recited in claim **2**, wherein the void further comprises a frusto-conical void disposed proximal the second end face and an arc-shaped void integral with frusto-conical void and disposed adjacent a distal surface of the frusto-conical void.

4. The joint as recited in claim **3**, wherein the frusto-conical member has a mouth of a diameter smaller than the mouth of the frusto-conical void to produce a first gap disposed at the interface between the first and second end faces.

5. The joint as recited in claim **4**, wherein the adhesive comprises a liquid adhesive prior to curing that is disposed in the first gap to bond the first and second wood segments.

6. The joint as recited in claim **3**, wherein the arc-shaped tip and the arc-shaped void is formed from a first and second sphere, respectively, and wherein the first sphere has a radius greater than the second sphere to produce a gap disposed adjacent an interface between the arc-shaped tip and the inner wall of the second wood segment.

7. The joint as recited in claim **6**, wherein the second gap forms a pocket sized to receive the adhesive that bonds the first and second wood segments.

8. The joint as recited in claim **7**, wherein the adhesive is a liquid adhesive prior to curing.

9. The joint as recited in claim **3**, wherein frusto-conical member and the frusto-conical void present outer walls that form the same angle with respect to the axial direction.

10. The joint as recited in claim **1**, wherein the first and second wood segments have one of a round, oval, and rectangular cross-section.

11. A method for producing a joint operable to bond a first axially extending wood segment presenting a first end face to a second axially extending wood segment presenting a second end face, the method comprising the steps of:

(a) forming a single protrusion with a smooth surface that extends axially outwardly from the first end face and centered on the first end face;

(b) forming a single void defined by an inner wall of the second wood segment, wherein the void has a smooth surface and extends axially inwardly from second end face and is centered with respect to the second end face, and wherein the void is sized to receive the protrusion therein; and

(c) depositing an adhesive at an interface between the protrusion and the inner wall of the second wood segment to join the first and second wood segments together.

12. The method as recited in claim **11**, wherein step (a) is performed using a cutter presenting at least one helical flute disposed on its outer surface.

13. The method as recited in claim **11**, wherein step (b) is performed using a cutter presenting at least one helical flute disposed on its outer surface.

* * * * *